Product title:

Locking washers type "A" M17LE4816

Product image:

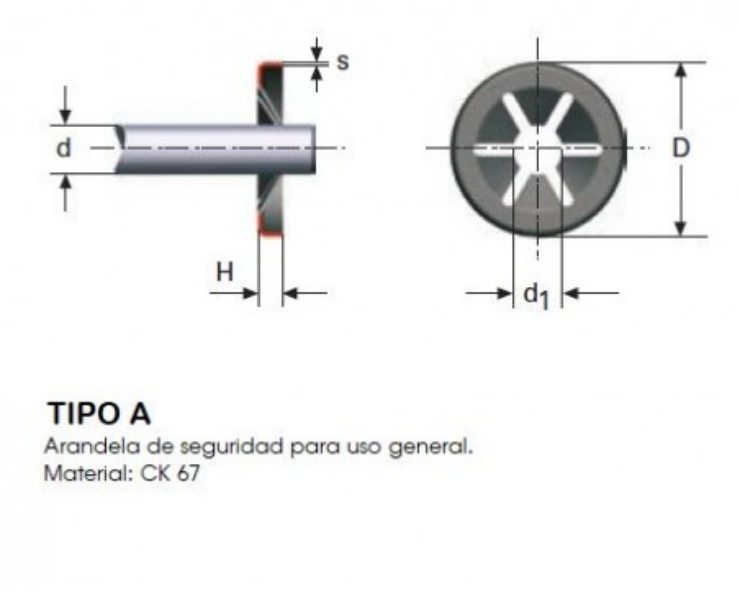

Product price:

€0.72

Product short description:

Locking washers type "A" M17LE4816

Product features:

THICKNESS: 0.2
WASHER DIAMETER (D): 9.5
SHAFT DIAMETER: 3
THICKNESS WASHER (H): 1.2
NUMBER OS STRIPS: 4
WASHER TYPE: A
INSIDE DIAMETER: 2.50–2.650

Product description:

ARANLOCK Lock washers are ideal for use as locking devices on shafts and tubes, etc.

The lock washer has radial tabs with reinforcements on the edges, which increases the locking capacity and can be used on most materials, such as steel, metals or plastic.

In many cases, lock washers can replace nuts, pins or other similar locking devices.

Normally, no preparation of the shaft, such as grooves, is necessary, as the locking mechanism is very effective on its own.

Fitting is simple and fast.

Copyright Muelles Crom s.a.
Jordi Camp 42-44
08403 Granollers
(Barcelona)
SPAIN
NIF ESA08720906

The washer sits firmly and can only be removed by being broken

Copyright Muelles Crom s.a.
Jordi Camp 42-44
08403 Granollers
(Barcelona)
SPAIN
NIF ESA08720906